Automatic Sprinkler Systems

Scanned with OKEN Scanner

Basic Components

- Introduction
- Discuss Objectives
- The Automatic Sprinkler
- Types of Sprinkler Systems
- Matching The Risk With The Correct Protection
- Design Methods and Water Supplies
- Automatic Sprinkler System Components
- Sprinkler System Inspection, Tests, and Maintenance

Scanned with OKEN Scanner

The Automatic Sprinkler

- History dates to mid to late 1800's
- Forerunner of modern sprinkler was perforated pipes
- Extremely effective - Controls over 96% of fires
- Designed to apply water over the source of the fire
- Operates from heat generated by fire
- Each sprinkler operates independently
- Numerous types to meet protection requirements

Scanned with OKEN Scanner

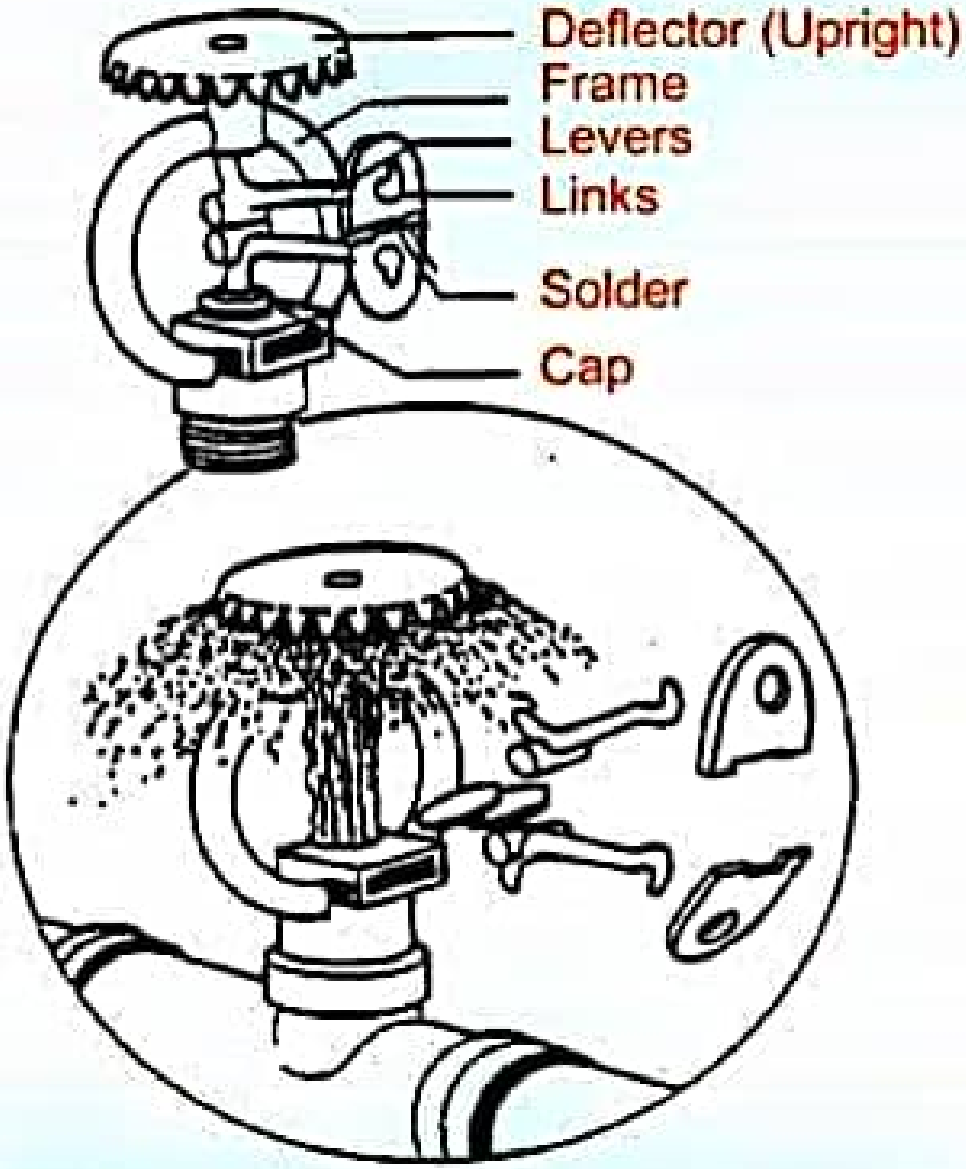

The Automatic Sprinkler

Scanned with OKEN Scanner

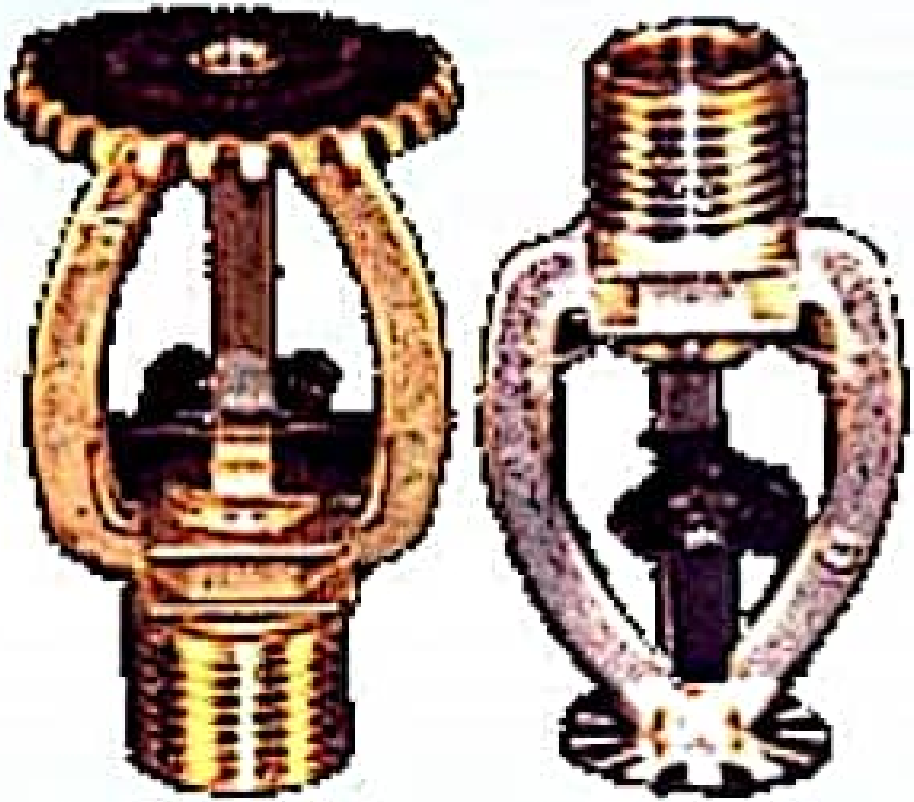

Upright & Pendent Standard Sprinklers

Scanned with OKEN Scanner

Pendent Quick Response Glass Bulb Sprinkler

Scanned with OKEN Scanner

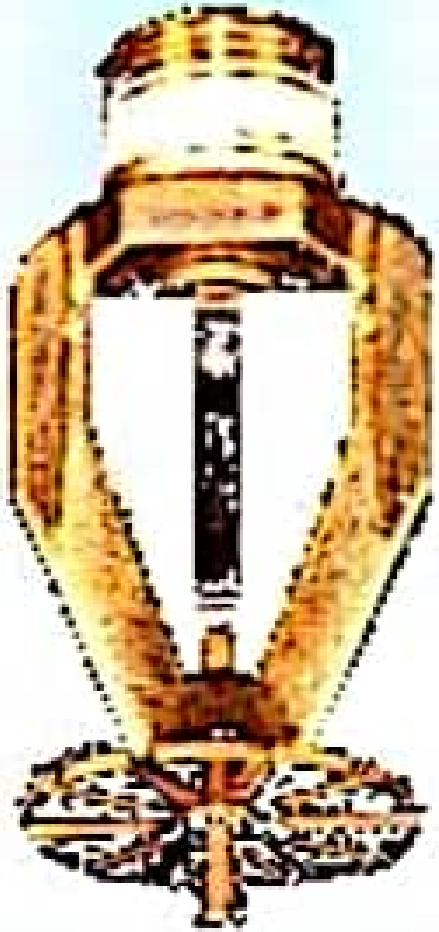

ESFR Sprinkler

Early Suppression Fast Response

Scanned with OKEN Scanner

Types of Sprinkler Systems

- Wet Pipe Systems
- Dry pipe Systems
- Pre-action Systems
- Early Suppression Fast Response (ESFR)
- Large Drop

Scanned with OKEN Scanner

Wet Pipe Systems

- Area must be heated
- Piping contains water under pressure
- Water applied as soon as sprinkler fuses
- Fast acting - Preferred system

Scanned with OKEN Scanner

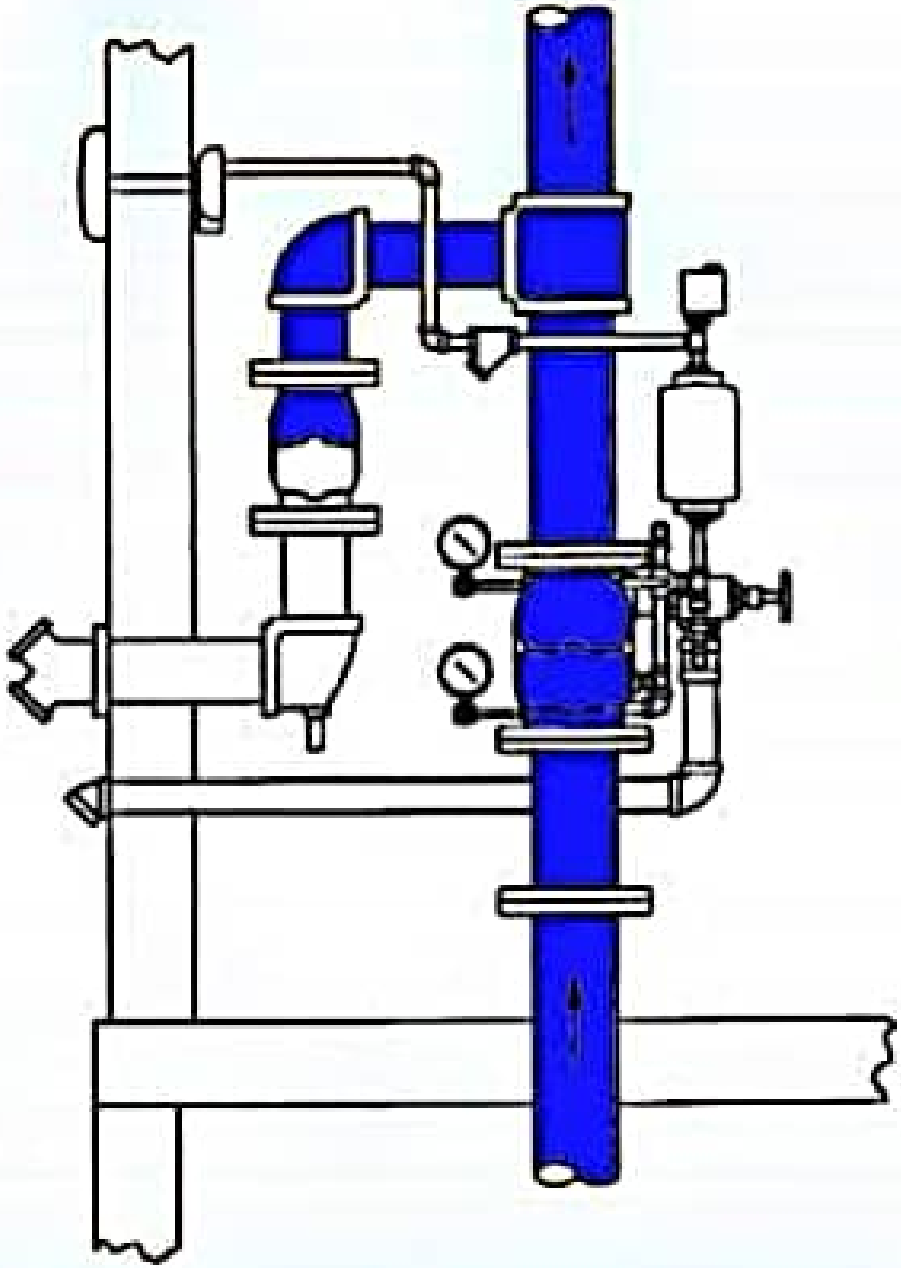

Typical Wet Pipe System Riser

Scanned with OKEN Scanner

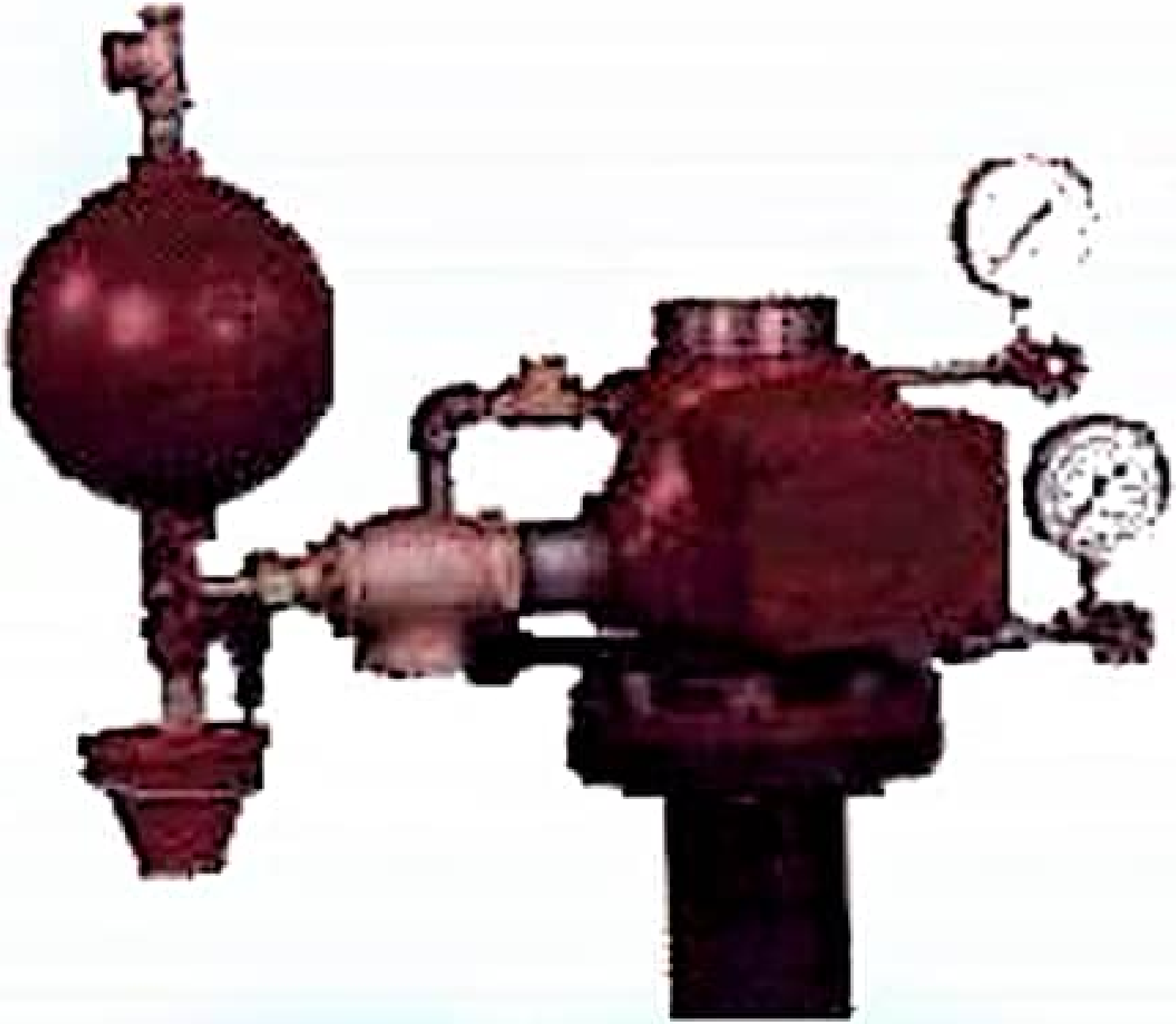

Alarm Check Valve with Trim

Scanned with OKEN Scanner

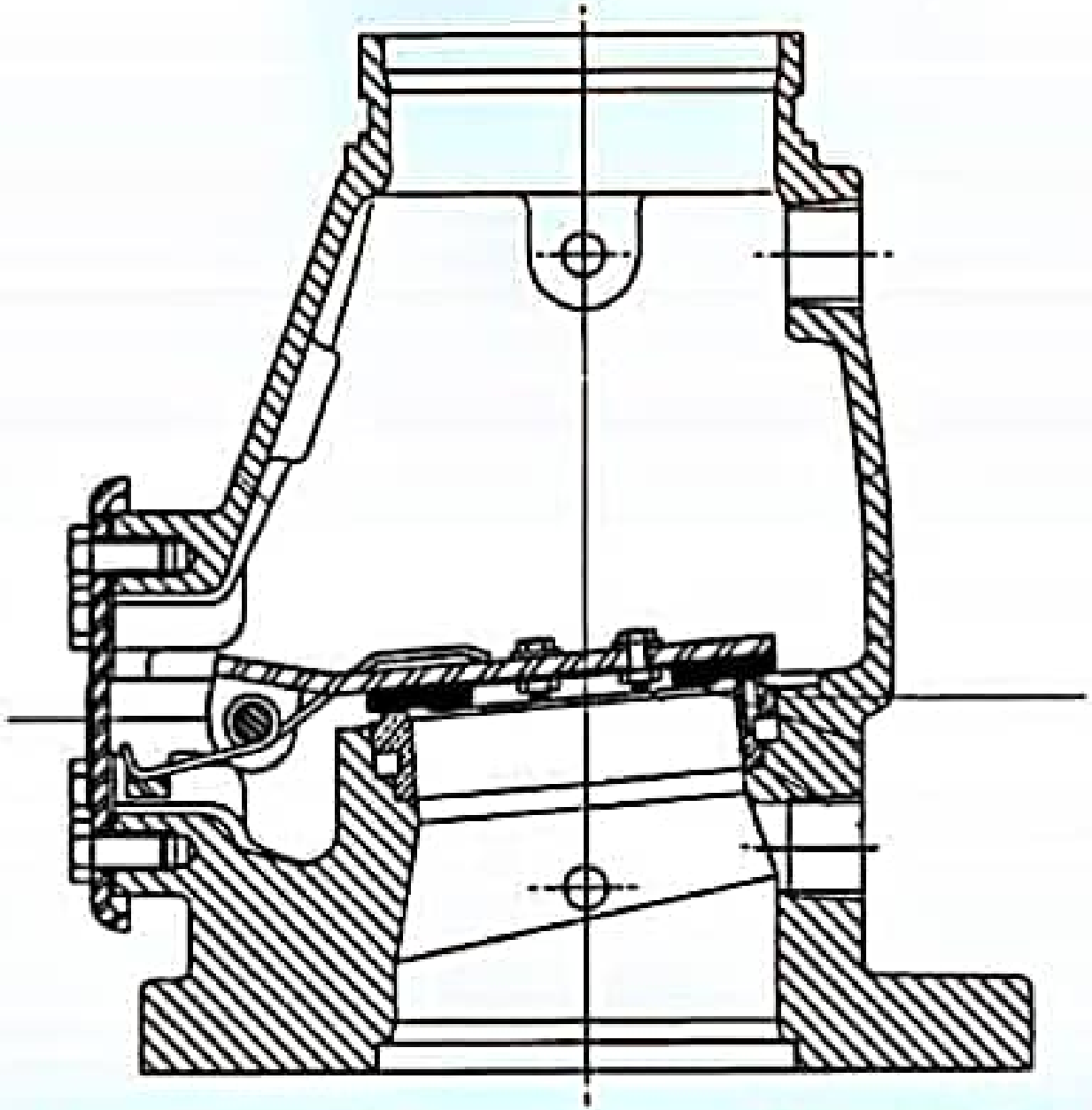

Alarm Check Valve for Wet Pipe System

Scanned with OKEN Scanner

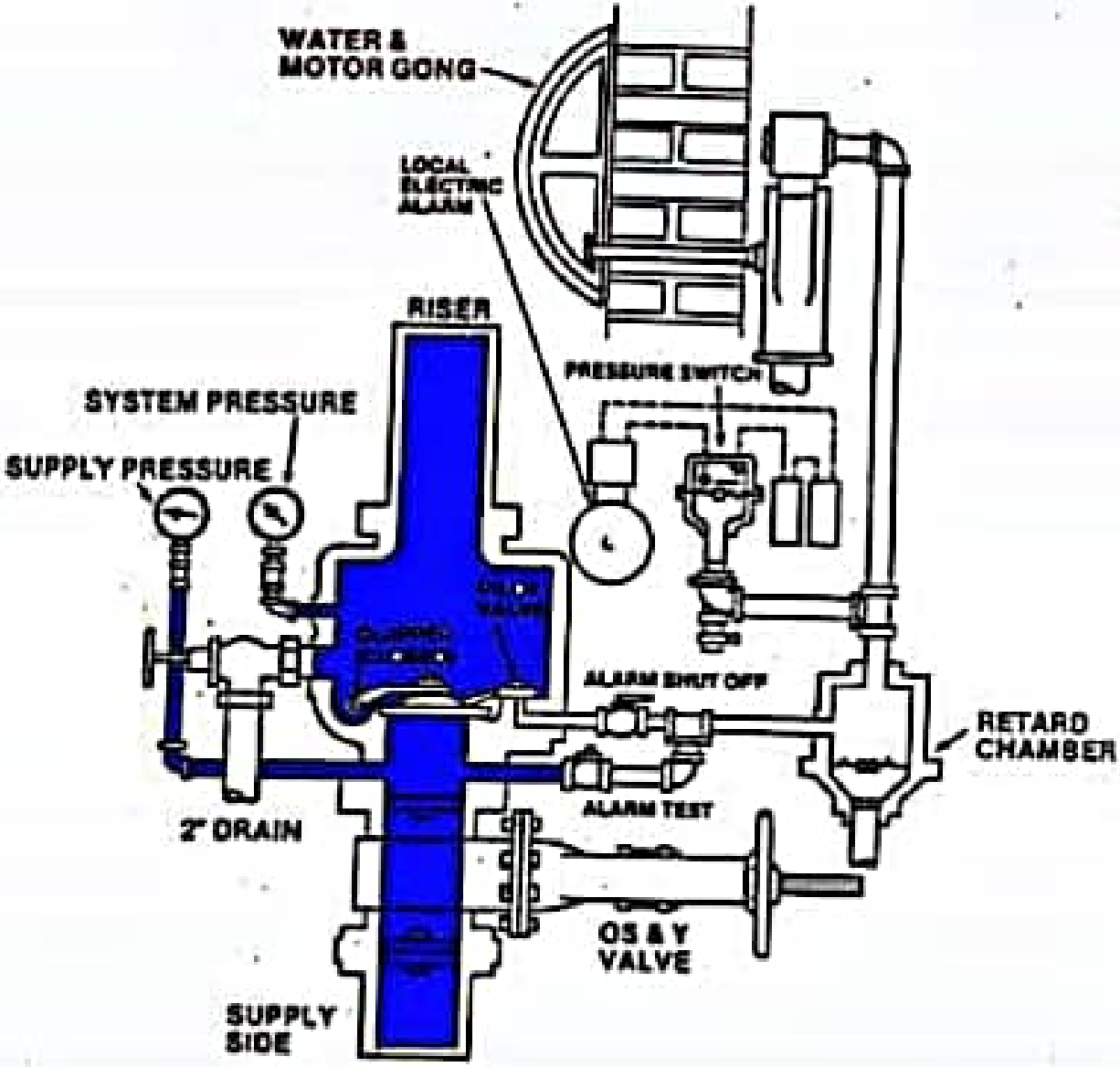

WET PIPE SPRINKLER CONTROL VALVE
(STANDBY POSITION)

Scanned with OKEN Scanner

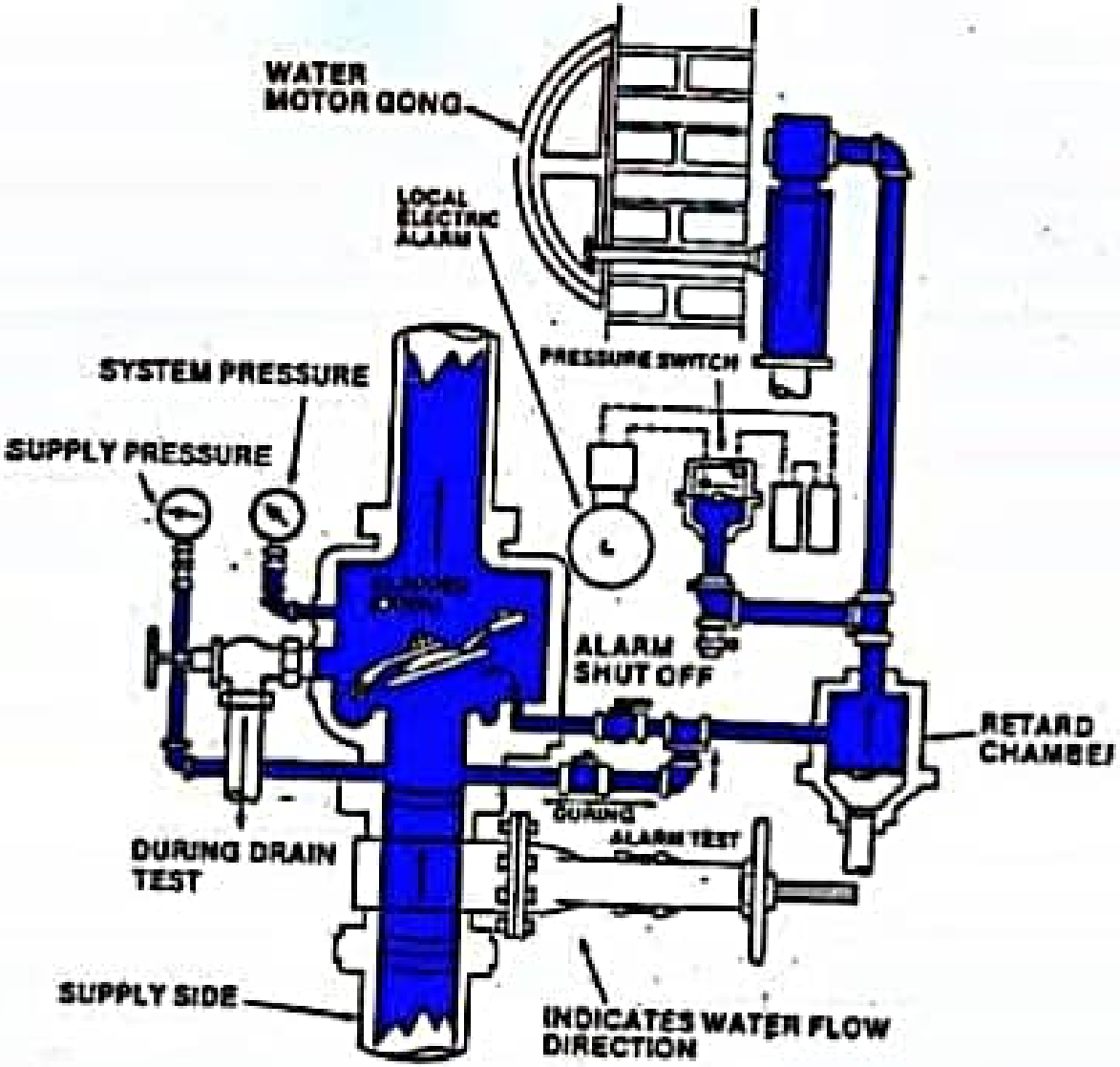

WET-PIPE SPRINKLER SYSTEM WATER FLOW DIRECTIONS (OPERATING POSITION)

Scanned with OKEN Scanner

Dry Pipe Systems

- Area experiences freezing temperatures
- Piping contains air under pressure
- Water application delayed until air pressure bleeds from system after sprinkler fuses
- Slow acting - Less desirable system

Scanned with OKEN Scanner

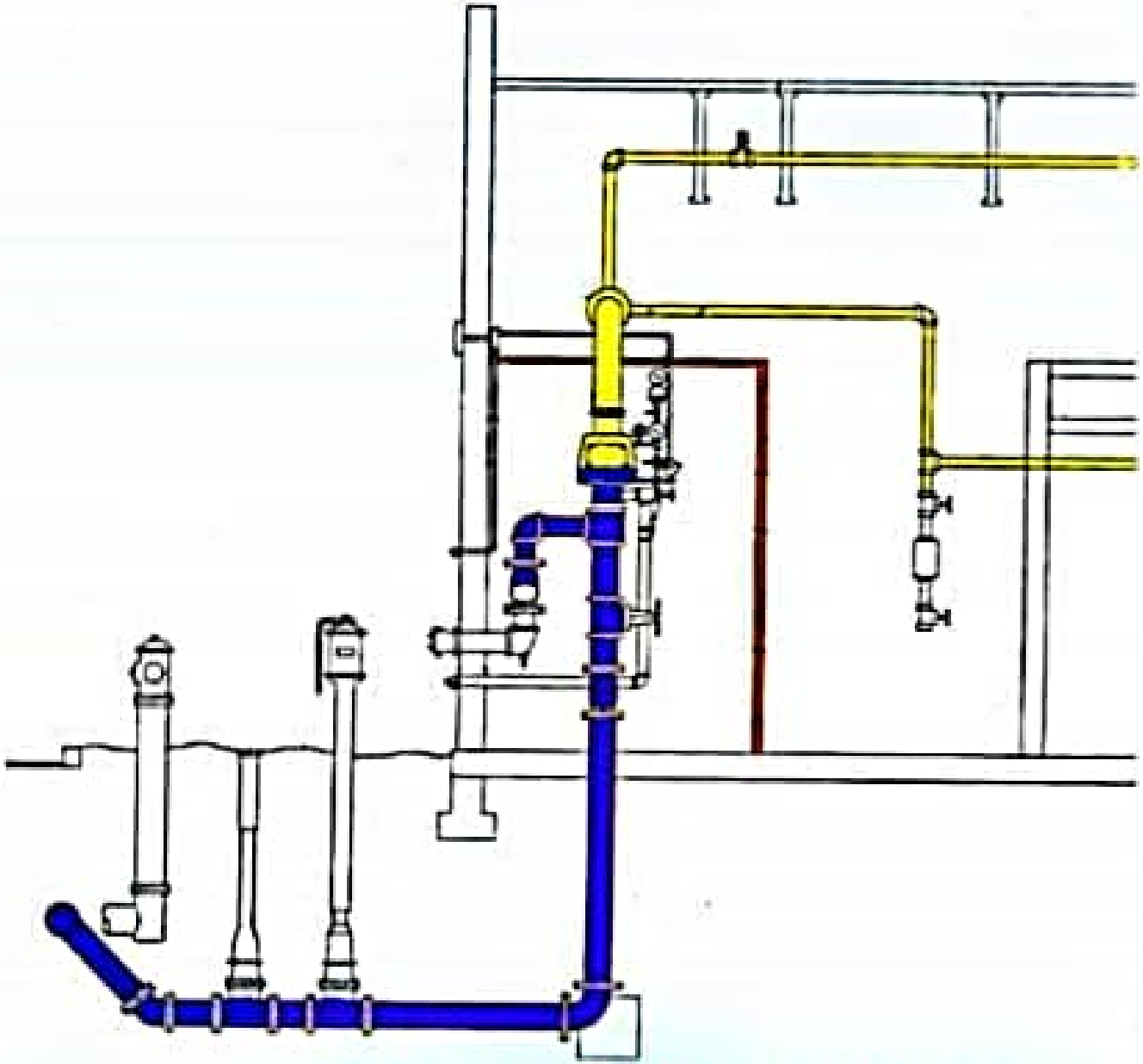

Typical Dry Pipe System

Scanned with OKEN Scanner

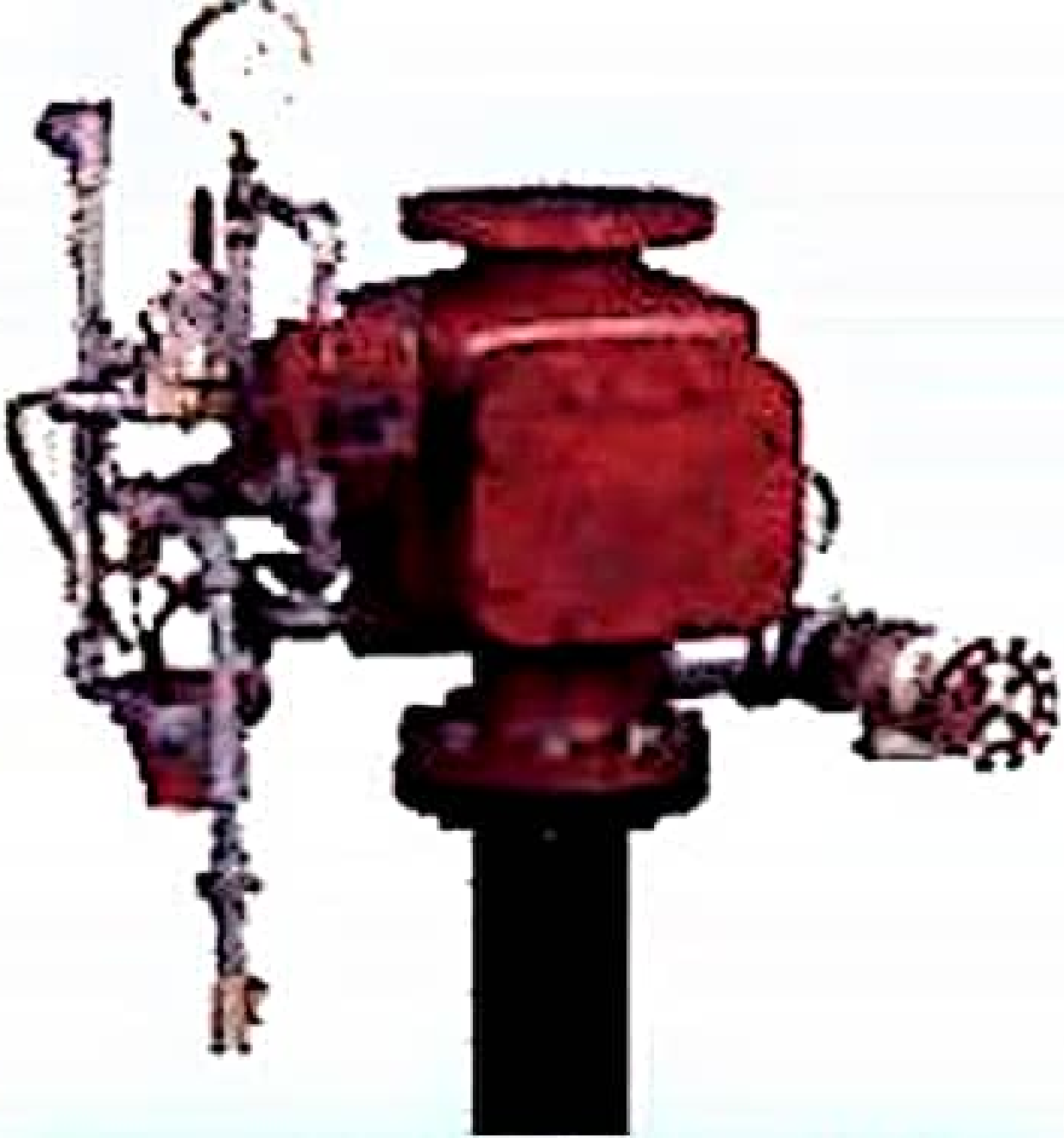

Typical Dry Pipe Valve with Trim

Scanned with OKEN Scanner

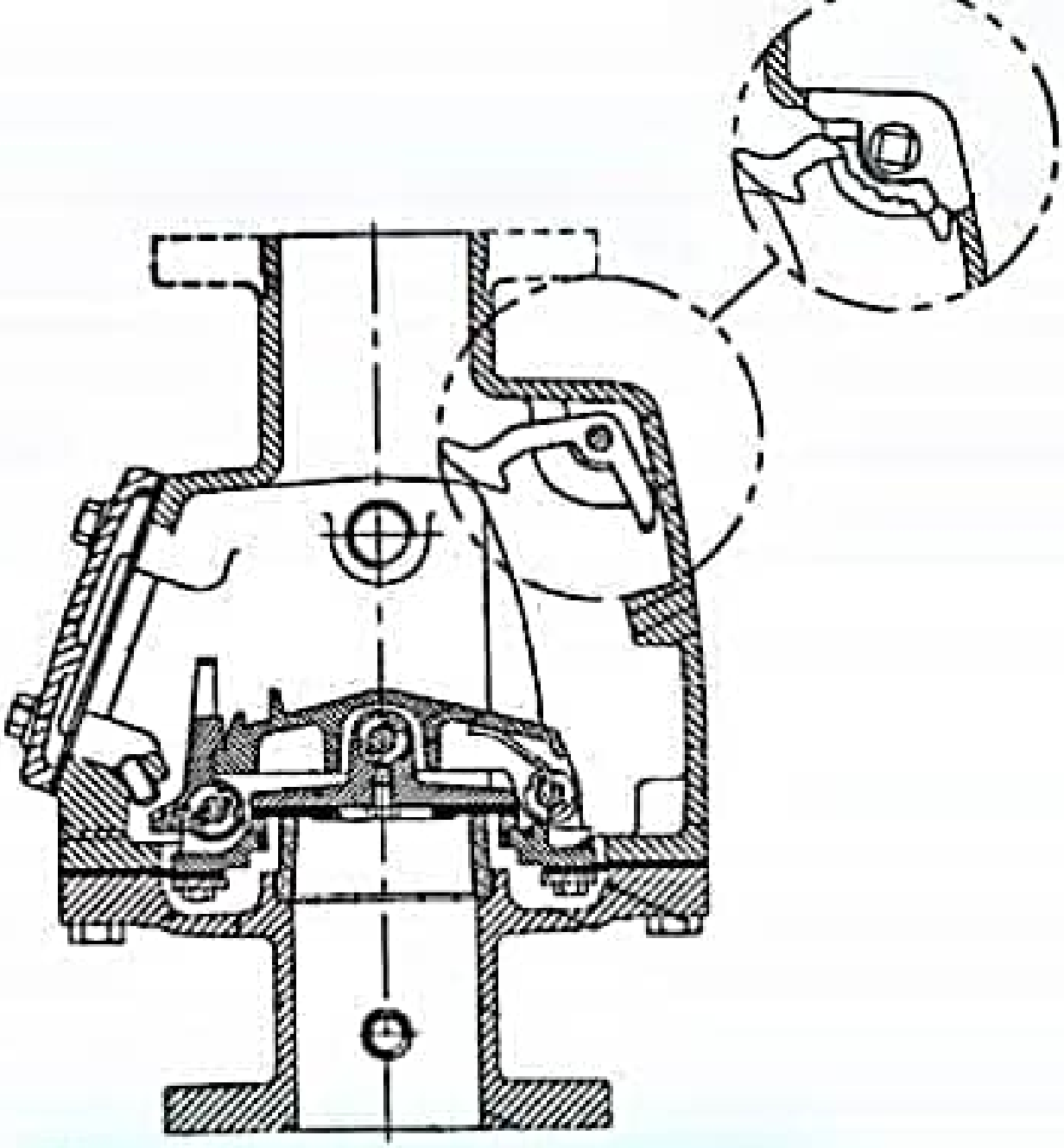

Dry Pipe Valve Assembly

Scanned with OKEN Scanner

DRY PIPE SPRINKLER SYSTEM (STANDBY POSITION)

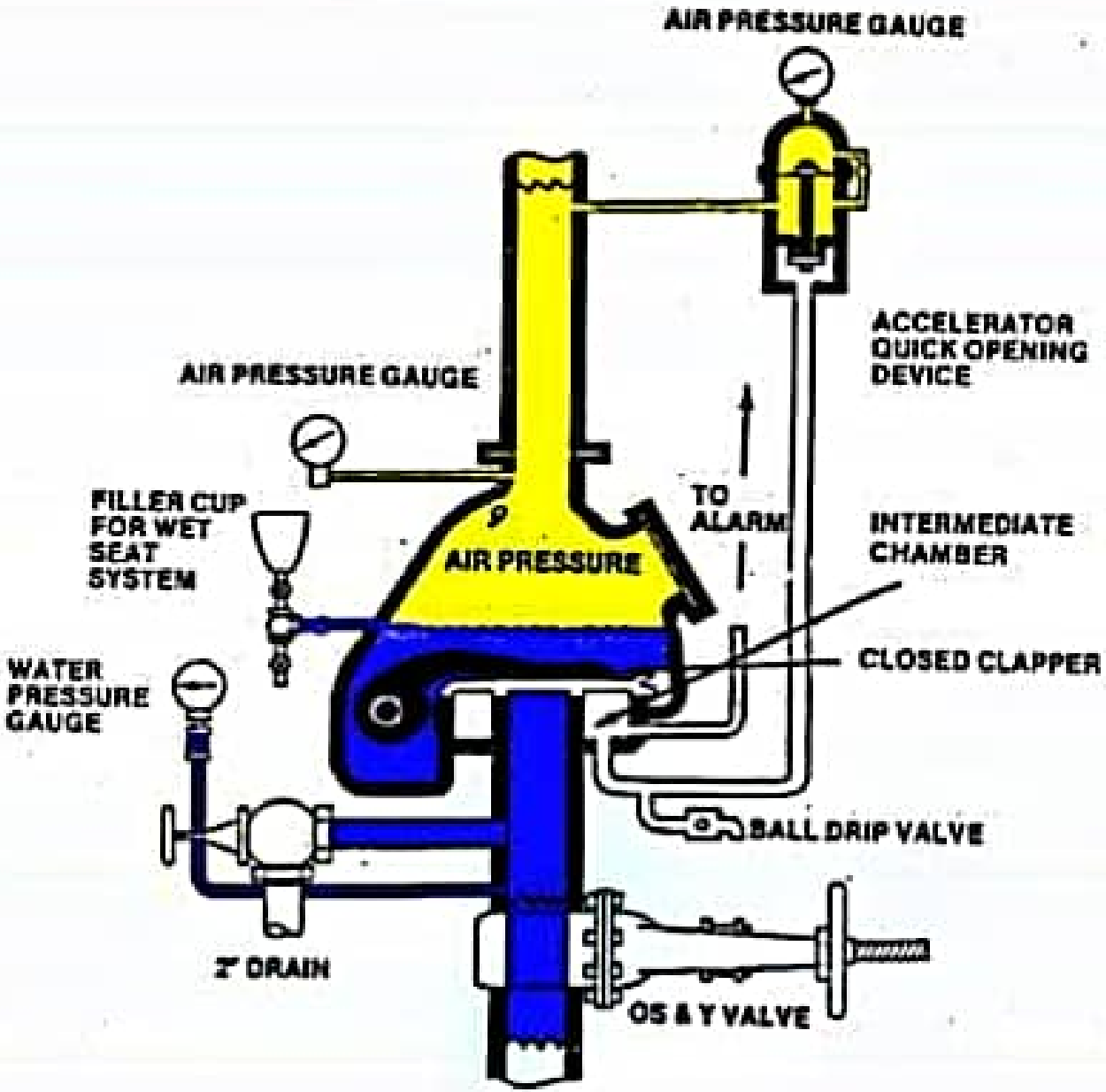

Scanned with OKEN Scanner

DRY PIPE SPRINKLER SYSTEM (OPERATING POSITION)

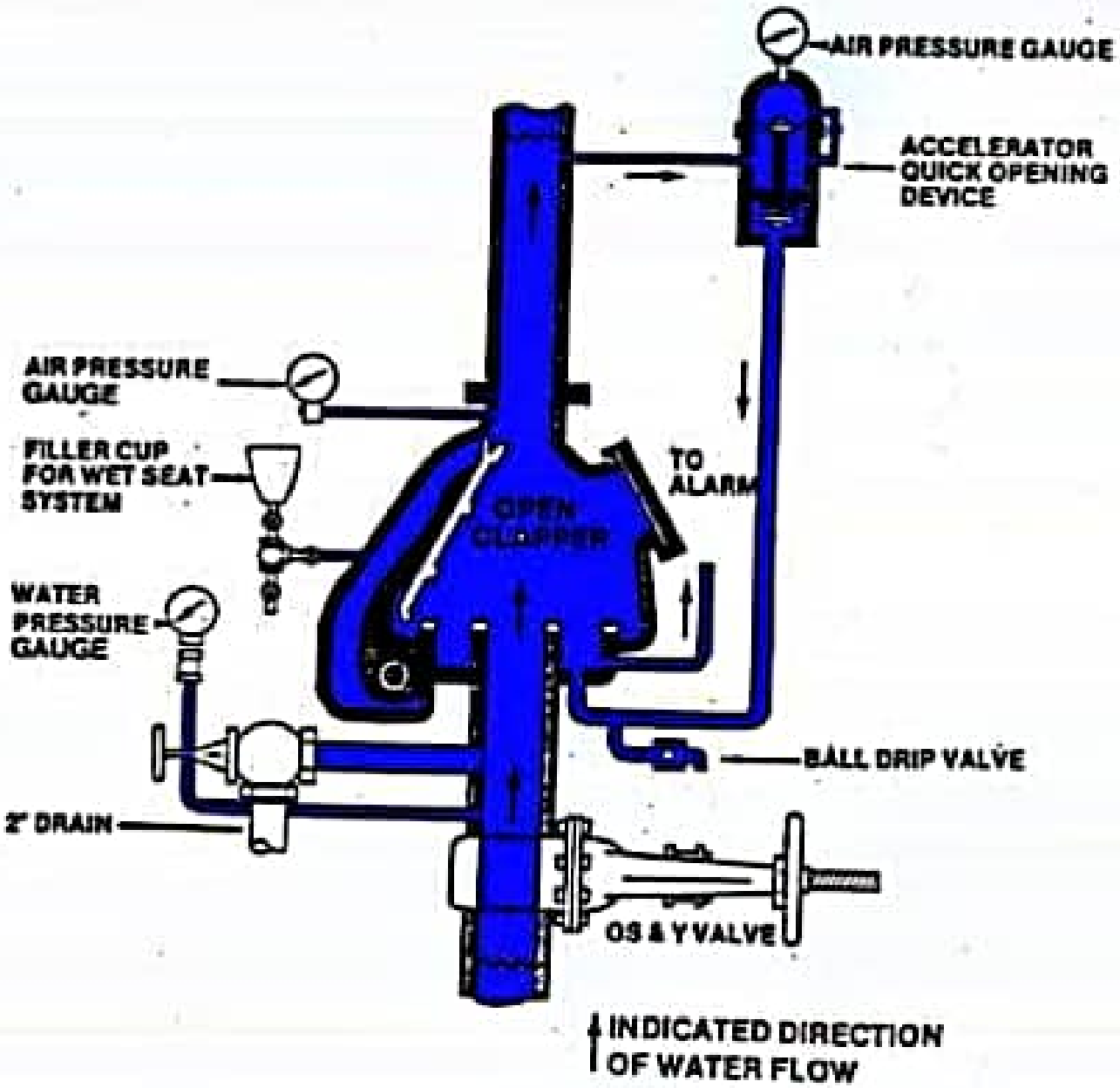

Scanned with OKEN Scanner

Pre-action Systems

- Area contains high valued water damageable contents
- Piping contains air under pressure
- Separate fire detection system
- Early alarm before water discharge

Scanned with OKEN Scanner

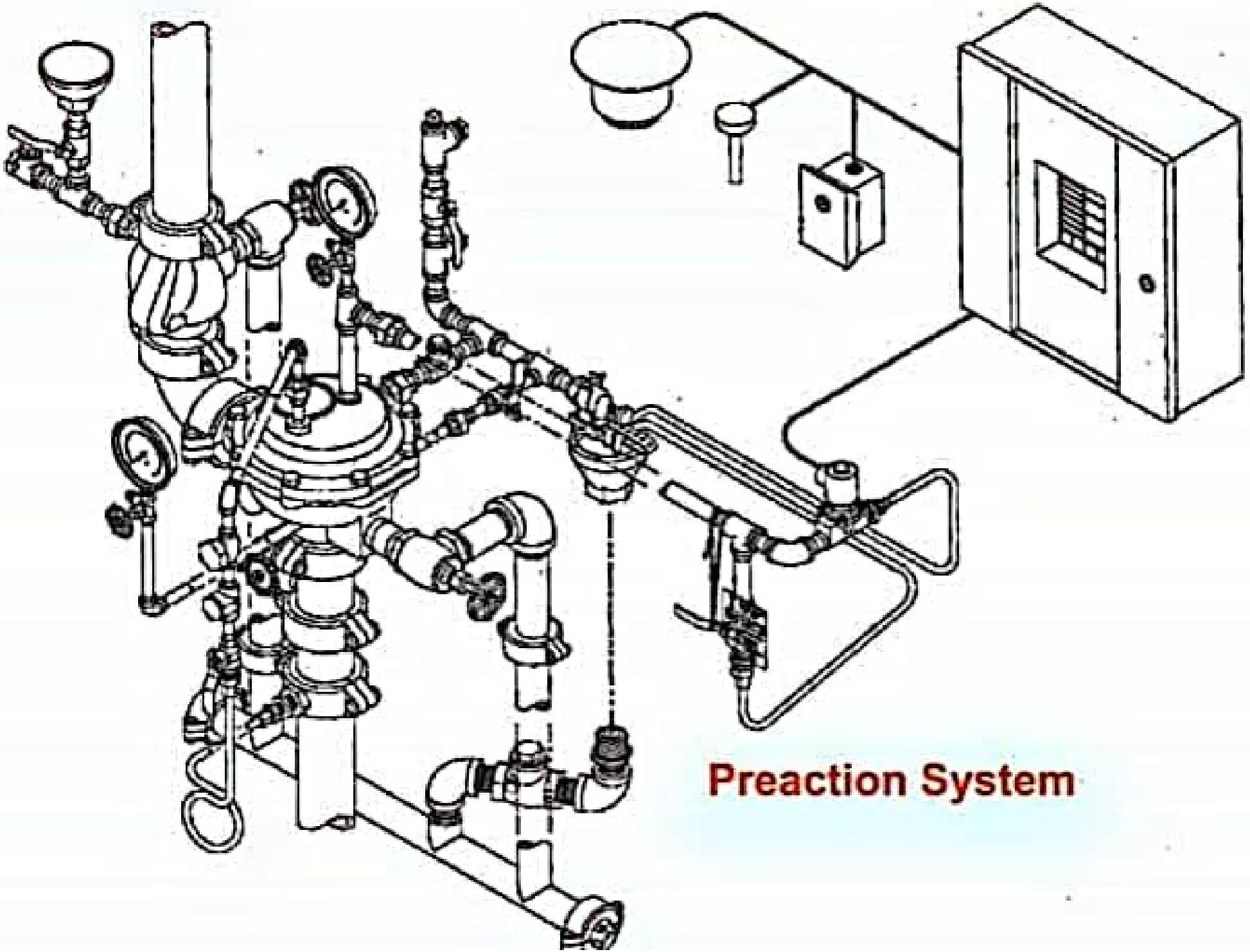

Preaction System

Scanned with OKEN Scanner

Typical Preaction System Riser

Scanned with OKEN Scanner

ESFR Sprinklers

Applications/Advantages

- Excellent for high storage
- Eliminates in-rack sprinklers
- Flexible storage arrangements

Scanned with OKEN Scanner

ESFR Sprinklers

Disadvantages

- Cost …often require fire pump
- Installation / construction restrictions
- Not Good for coolers or freezers
- Still require in-racks for motor oils, vegetable oils and aerosols

Scanned with OKEN Scanner

Large Drop Sprinklers

Applications/Advantages

- Also excellent for high storage
- Also eliminates in-rack sprinklers
- Good for coolers & freezers

Scanned with OKEN Scanner

Large Drop Sprinklers

Disadvantages

- Larger water demands … fire pump
- Still require in-racks for motor oils, vegetable oils and aerosols

Scanned with OKEN Scanner

Matching The Risk With The Correct Protection

+

Design Methods and Water Supplies

Scanned with OKEN Scanner

Design Methods

Pipe Schedule

- Older method based on tables in NFPA 13.

Hydraulically Designed

- System specifically matched to the Occupancy or Commodity Classification
- based on specific water density for a calculated area (_ usgpm/sq.ft. over _ sq.ft.)

Scanned with OKEN Scanner

Key Determining Factors

- "Occupancy"- Light, Ordinary, Extra Hazard
- "Commodity Classification" for storage & warehousing (Class I to IV or Plastic)
- Storage Heights
- Storage Arrangements (Rack vs Palletized)
- Specialty products / risks (aerosols, etc.)

Scanned with OKEN Scanner

The Decision Tree

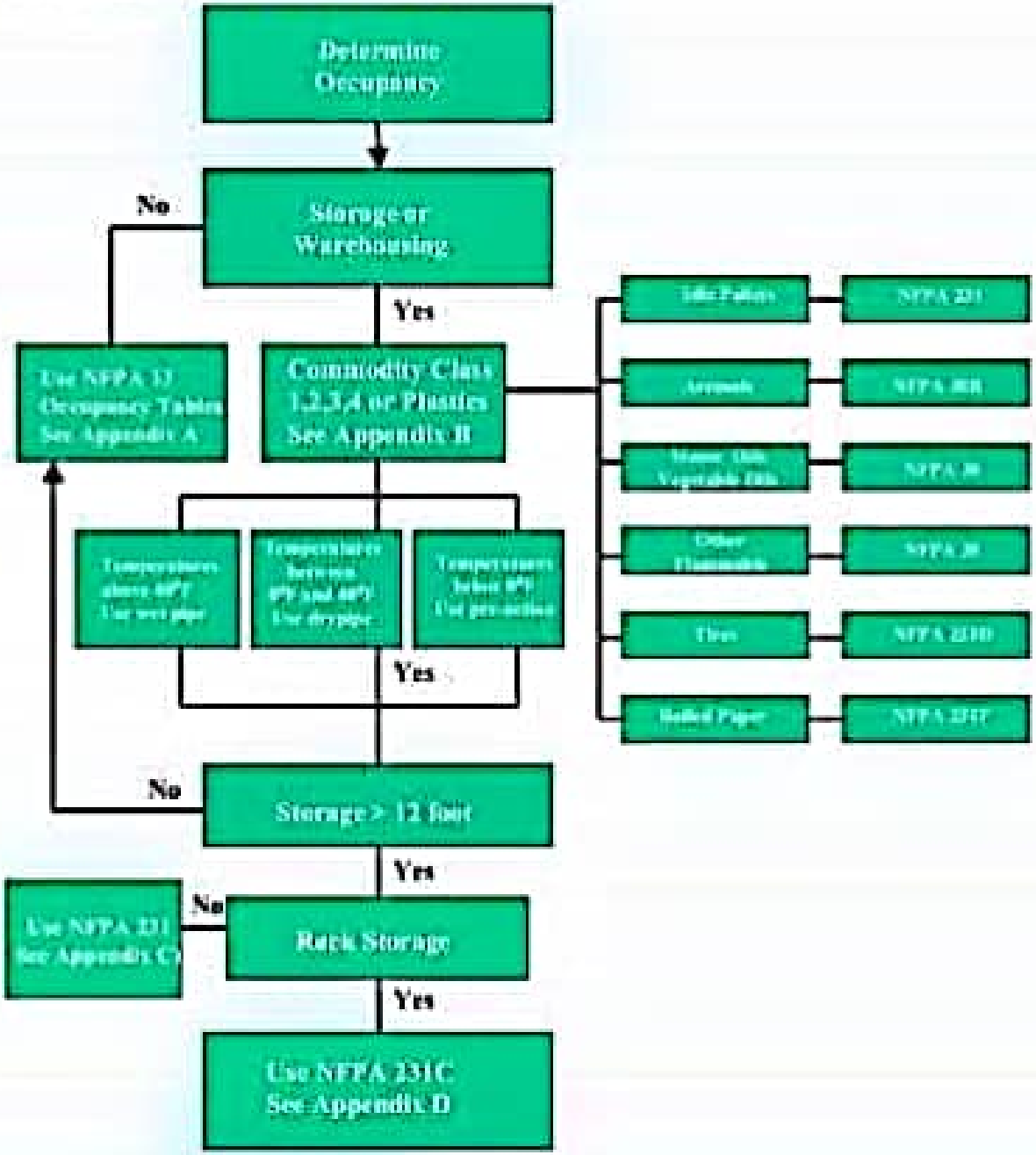

Scanned with OKEN Scanner

The Decision Tree - Example

The Details:

- Dry Grocery Warehouse
- Cereal, paper towels, pop canned food products
- New building 25 ‘ high roof
- 20 feet high storage
- Product palletized in solid piles (no racks)

Scanned with OKEN Scanner

Water Supplies

- Public Supply & Booster Pumps
- Gravity Tanks (Water Towers)
- Pressure Tanks
- Suction Tanks or reservoirs with Fire Pumps

Scanned with OKEN Scanner

System Components

Scanned with OKEN Scanner

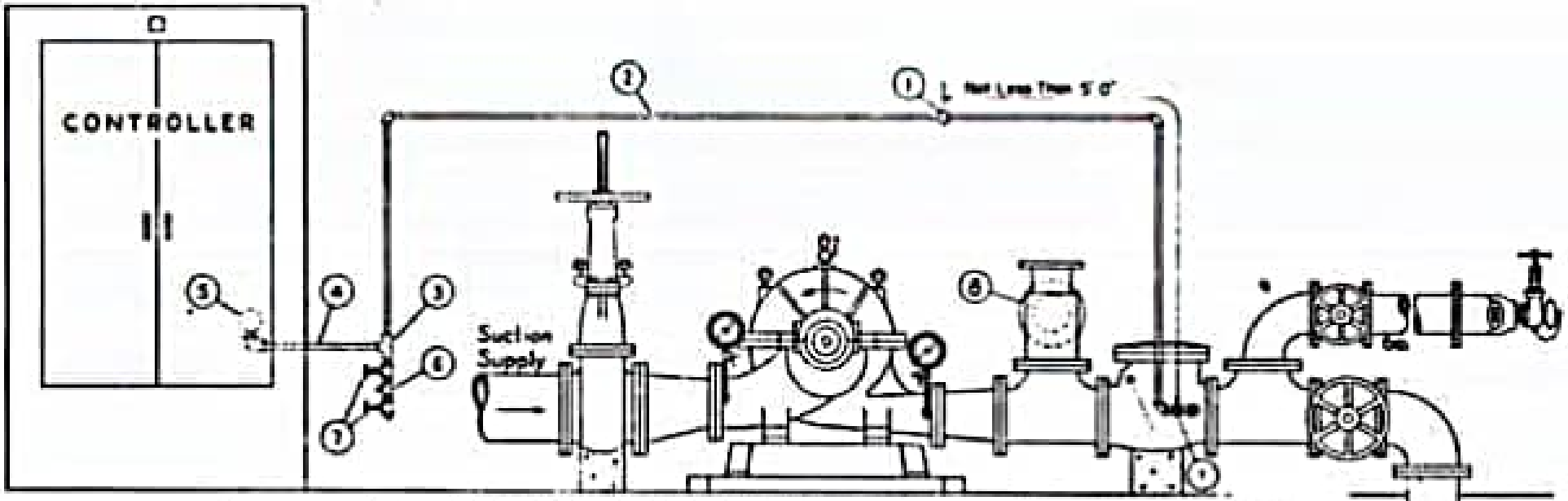

1. Bronze check valve with 3/32 in. (2 mm) orifice in clapper or ground-face union with noncorrosive diaphragm having 3/32-in. (2 mm) orifice
2. Not less than 1/2-in. (13 mm) brass pipe or copper tubing and fittings located outside controller
3. 1/2- by 1/2- by 1/4-in. (13 by 13 by 6 mm) tee
4. 1/4-in. (6 mm) brass pipe
5. Pressure switch
6. 1/2- by 1/2- by 1/4-in. (6 mm) opening for test gage plugged
7. 1/2-in. (13 mm) globe valves for testing automatic mechanism of controller
8. Relief valve

Figure FM-A-7-5.2.1. Acceptable Piping Connection for Automatic Fire Pump Control by System Pressure.

The Fire Pump

Scanned with OKEN Scanner

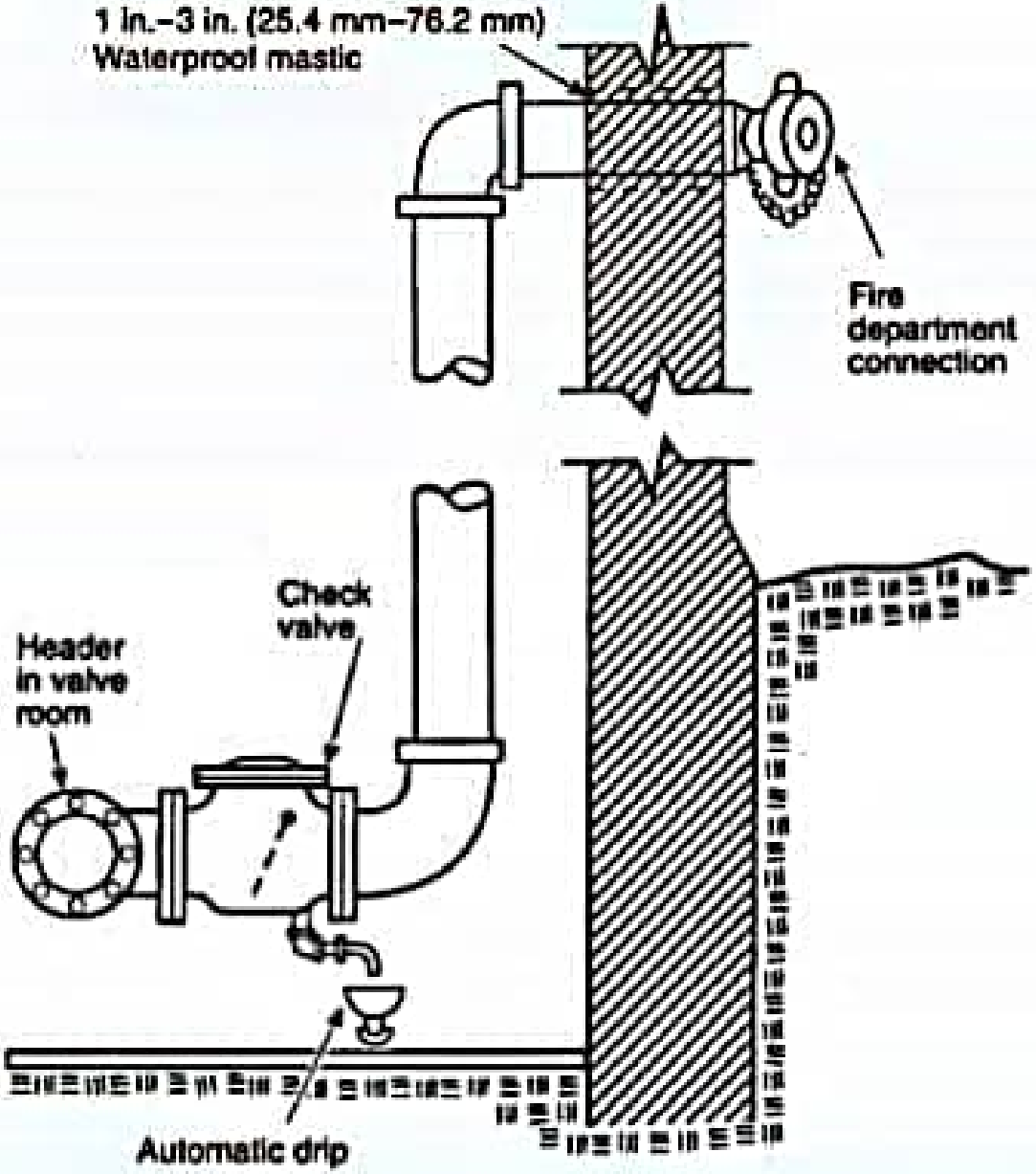

Typical Fire Department Connection

Scanned with OKEN Scanner

SIAMESE CONNECTION

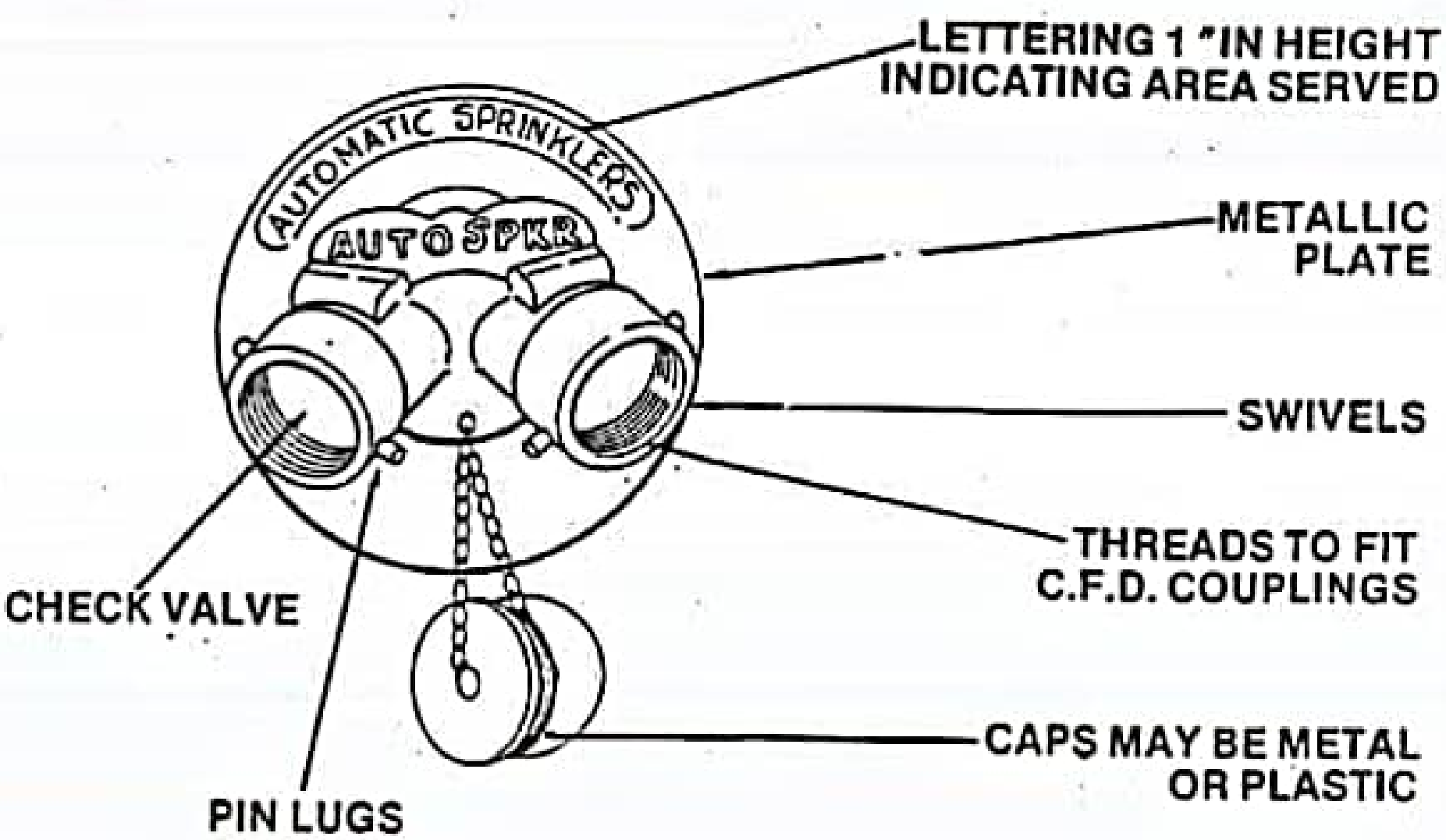

Scanned with OKEN Scanner

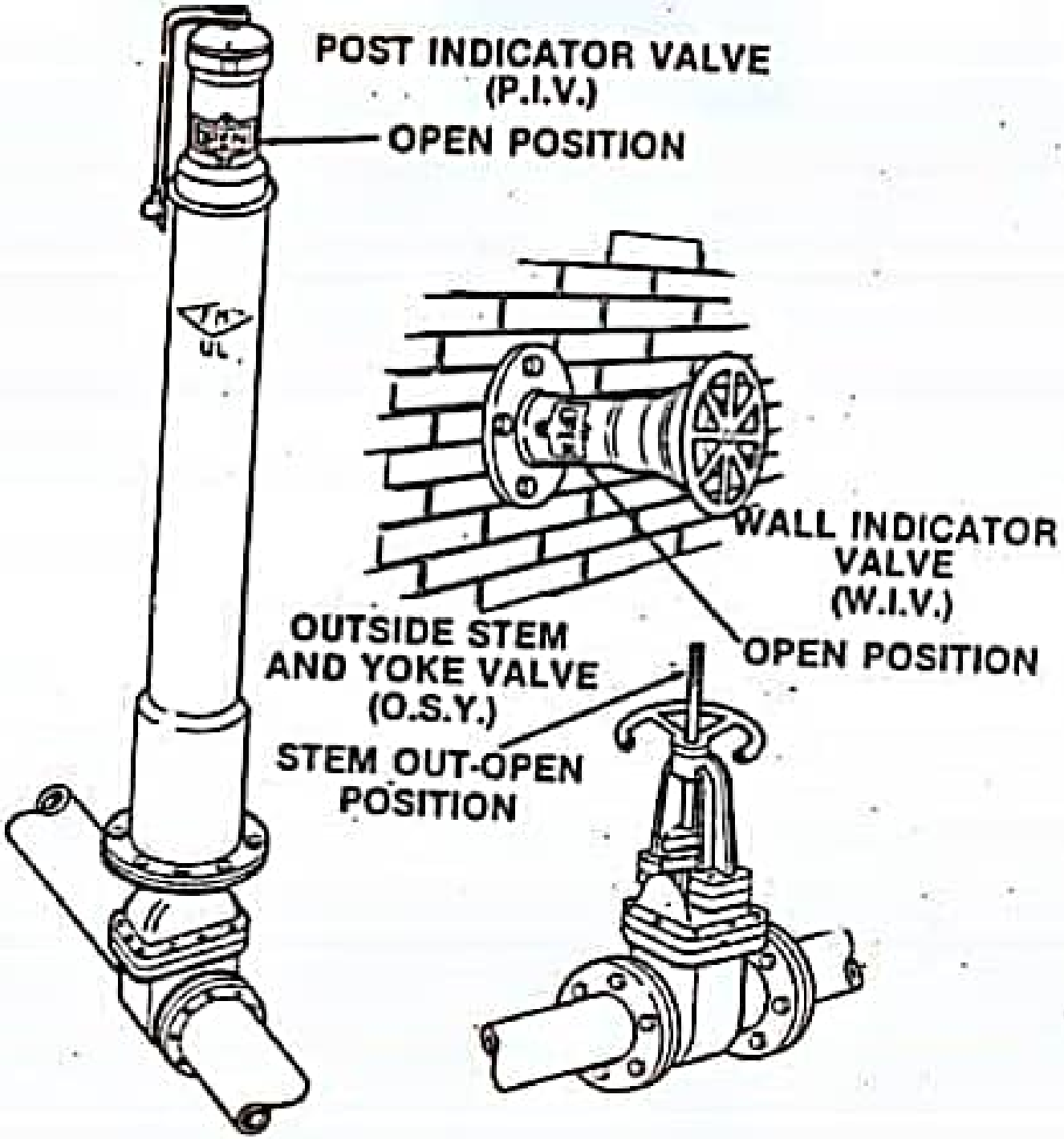

Scanned with OKEN Scanner

P I V

Post indicator Valve

Scanned with OKEN Scanner

OS&Y

Outside Stem & Yoke Valve

Scanned with OKEN Scanner

Butterfly Valve w/ Tamper Wiring

Scanned with OKEN Scanner

Standard Gate Valve

Scanned with OKEN Scanner

Swing Check Valve

Scanned with OKEN Scanner

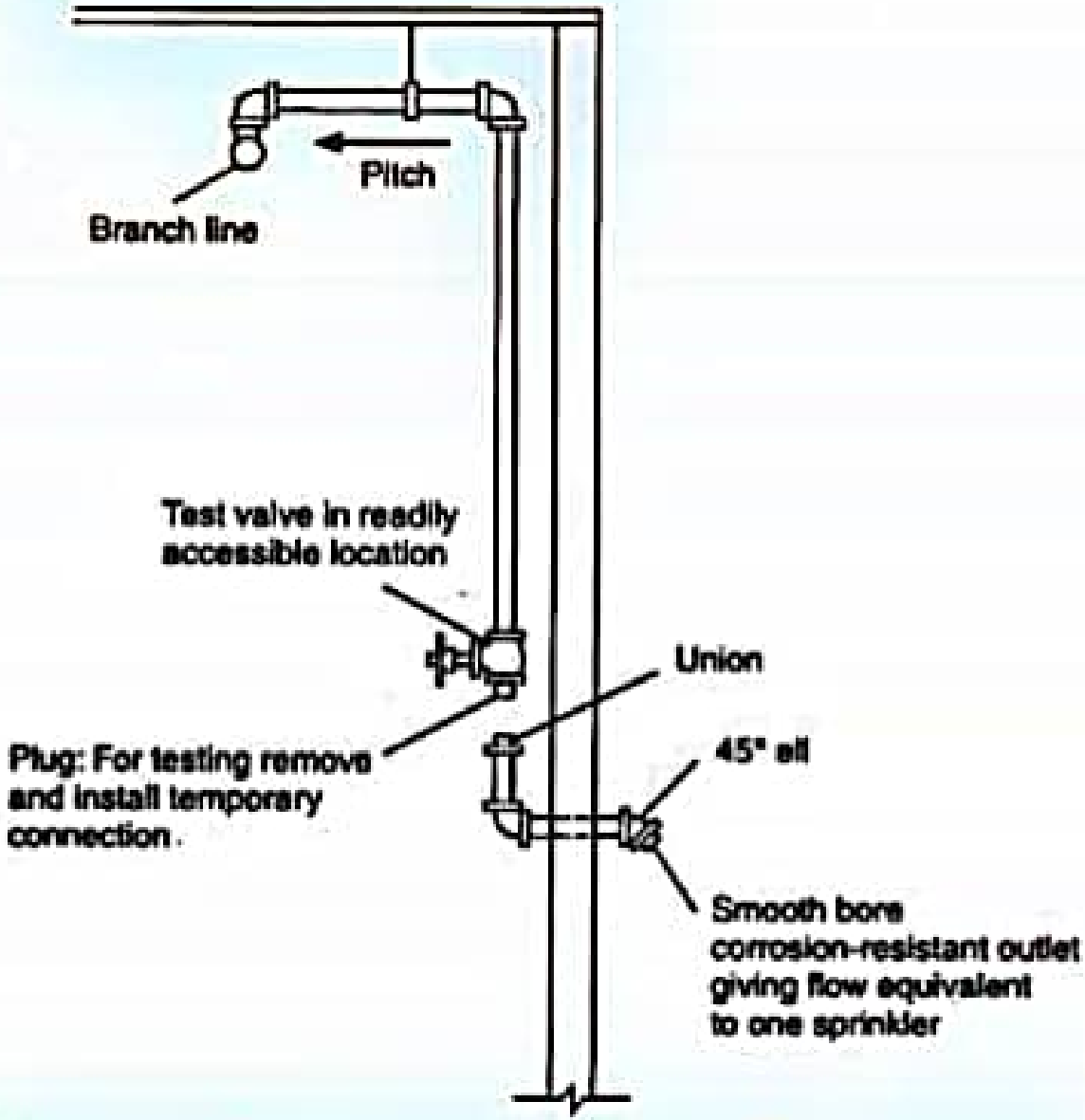

Typical Inspector's Test Connection

Dry Pipe System Shown - Wet Pipe System is Similar

Scanned with OKEN Scanner

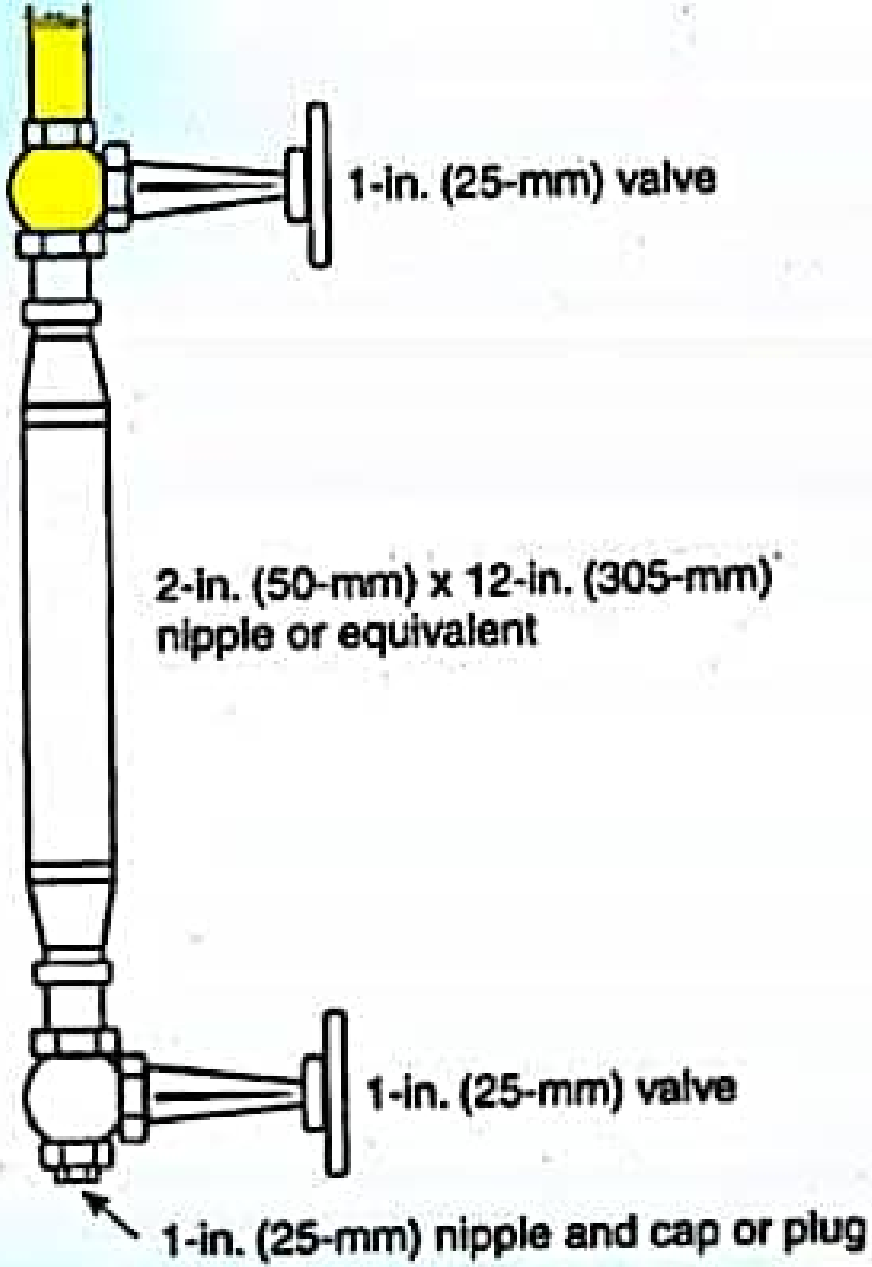

Dry System Auxiliary Drain

Scanned with OKEN Scanner

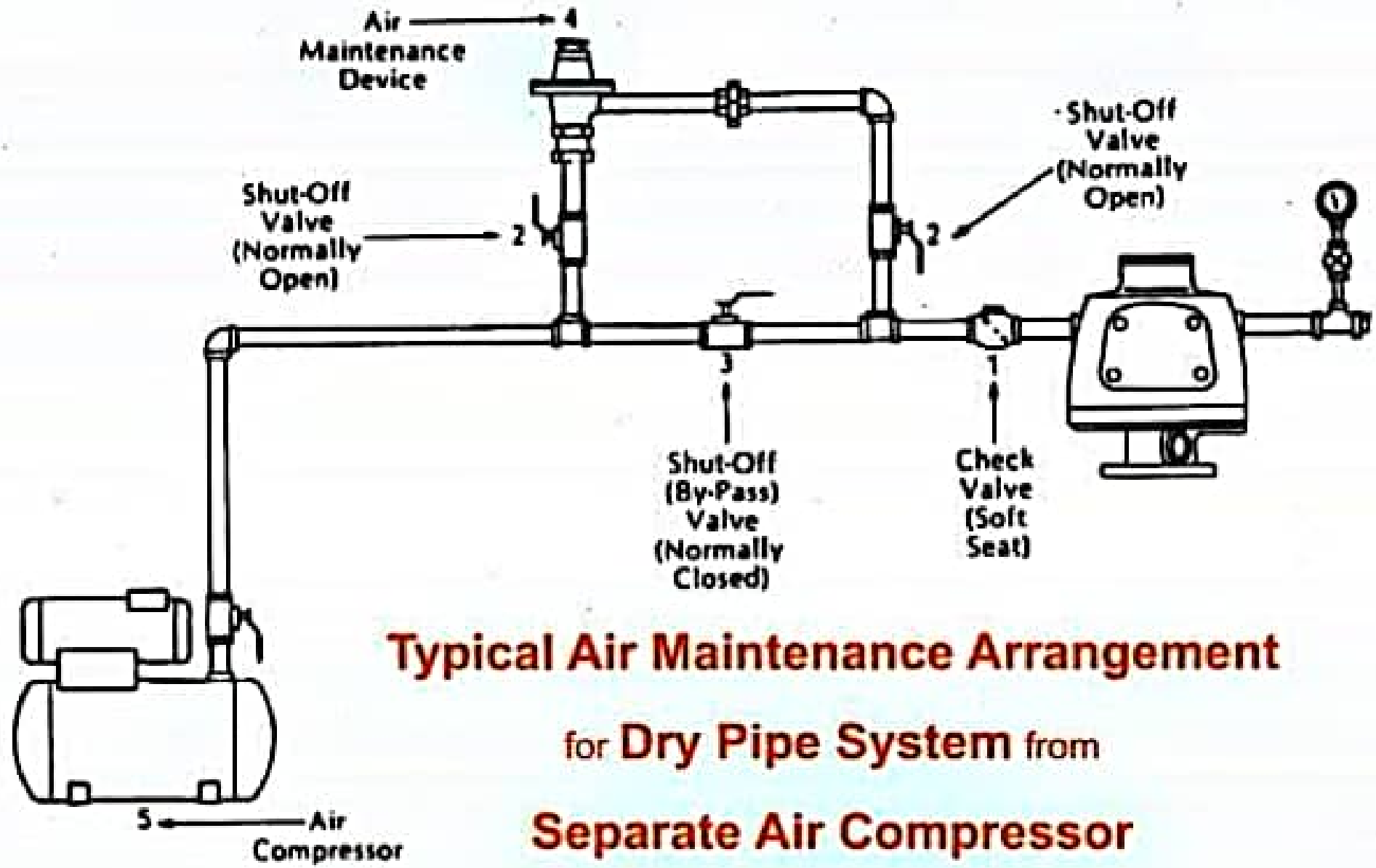

Typical Air Maintenance Arrangement

for Dry Pipe System from

Separate Air Compressor

Scanned with OKEN Scanner

The Complete Fire Protection System

Scanned with OKEN Scanner

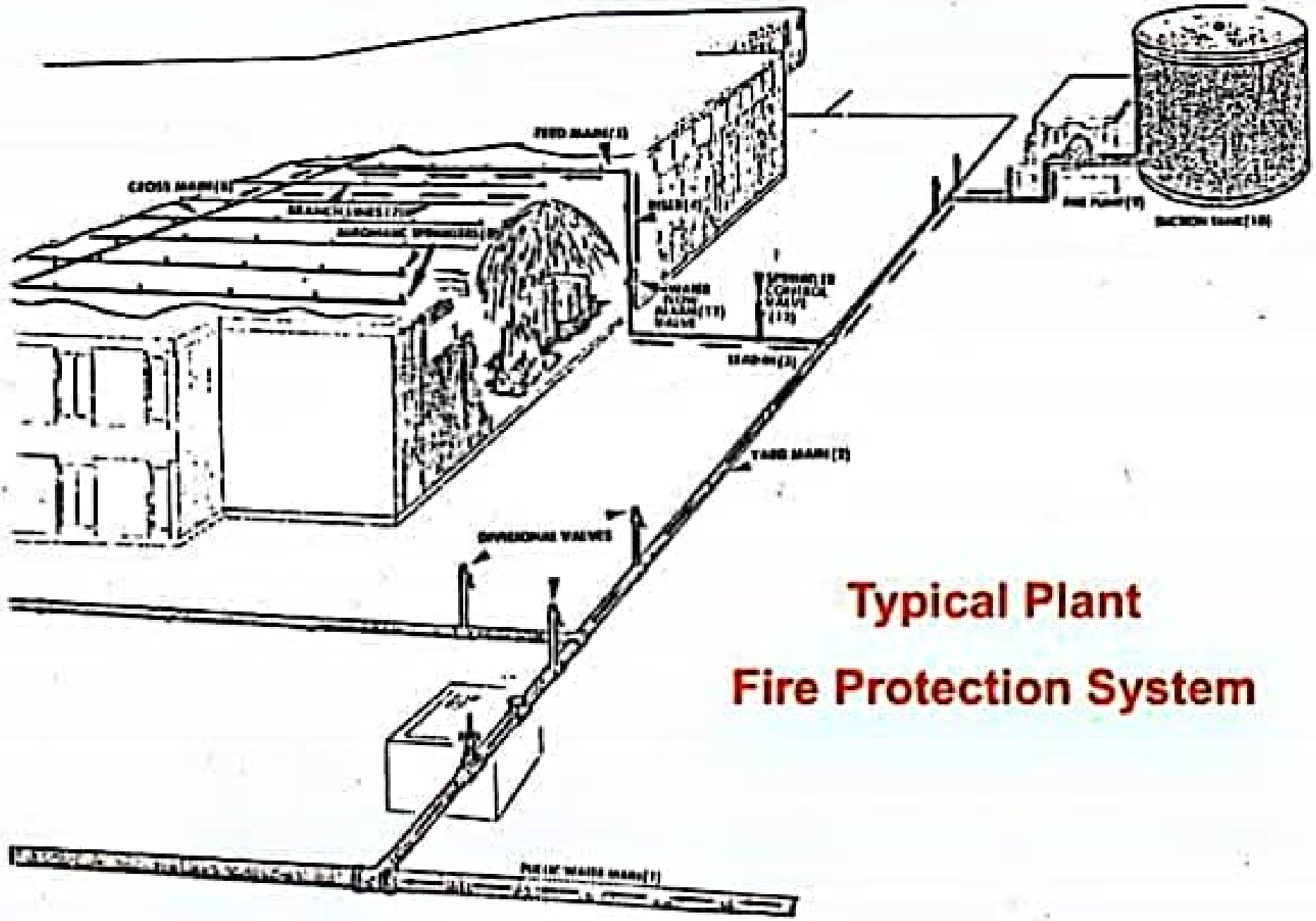

Typical Plant Fire Protection System

Scanned with OKEN Scanner

Sprinkler System Inspection, Test, and Maintenance

National Fire Protection Association

Standard #25

Scanned with OKEN Scanner